KRINNER
The Ground Screws

Technical Data Sheet M Series

Basic Info

KSF M 140x2100-M24	KSF M 114x2100-M24	KSF M 114x1600-M24	KSF M 114x1300-M24
Nominal length (mm)			
2100	2100	1600	1300
Tube diameter (mm)			
139.70	114.30	114.30	114.30
Weight (kg)			
26	21	16	13
Item number			
25400	25352	25351	25350

KSF M 140x 2100-M24

Construction

- Flange: Sheet metal S355
- Nut: DIN EN ISO 4032-8
- Continuous welded helix
- Coating: Hot-dip galvanized according to DIN EN ISO 1461

Applications

efficient · no concrete · durable

Krinner Schraubfundamente GmbH | Passauer Straße 55 | D-94342 Straßkirchen
Phone: +49 9424 9401-80 | E-Mail: service@krinner.com | www.krinner.com

KRINNER
The Ground Screws

Technical Data

	KSF M 140x2100-M24	KSF M 114x2100-M24	KSF M 114x1600-M24	KSF M 114x1300-M24
a	Length (mm) (±25 mm)			
	2070	2075	1575	1325
b	Shaft outer diameter (mm)			
	139.70	114.30	114.30	114.30
c	Inner diameter (mm)			
	132.50	107.10	107.10	107.10
d	Thread			
	M24	M24	M24	M24
e	Pitch circle diameter (mm)			
	180	150	150	150
f	Pitch circle holes (mm)			
	6 x ∅ 14	6 x ∅ 14	6 x ∅ 14	6 x ∅ 14
g	Flange wrench size (mm)			
	200	160	160	160
h	Flange outer diameter (mm)			
	225	182	182	182
i	Flange thickness (mm)			
	10	10	10	10

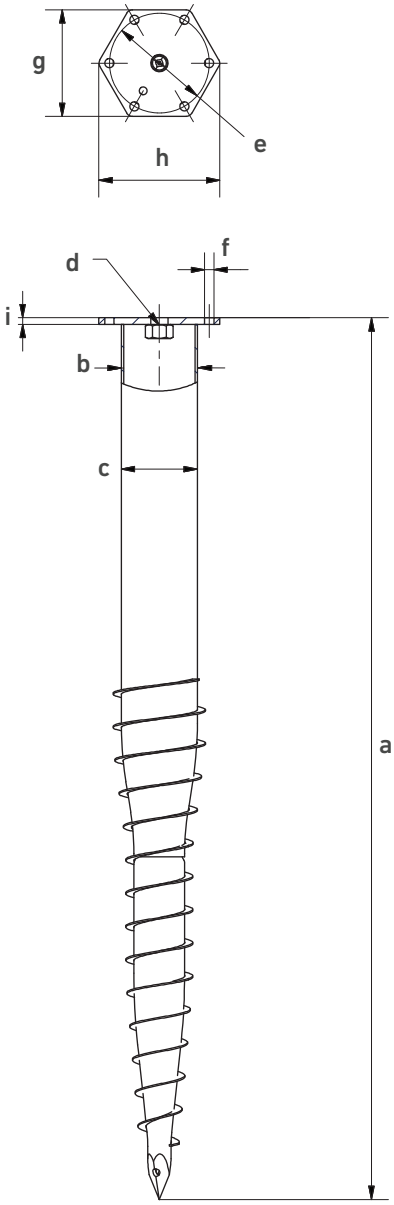

Online Service

KSF M 140x2100-M24	KSF M 114x2100-M24	KSF M 114x1600-M24	KSF M 114x1300-M24
Webkey			
M2540011D	M2535211D	M2535111D	M2535011D

Krinner Schraubfundamente GmbH | Passauer Straße 55 | D-94342 Straßkirchen
Phone: +49 9424 9401-80 | E-Mail: service@krinner.com | www.krinner.com

KRINNER
The Ground Screws

Technical Data Sheet M Series

Basic Info

KSF M 89x2100-M24	KSF M 89x1600-M24	KSF M 89x1300-M24
Nominal length (mm)		
2100	1600	1300
Tube diameter (mm)		
88.90	88.90	88.90
Weight (kg)		
18.00	14.00	11.50
Item number		
25302	25301	25300

KSF M 89x
1600-M24

Construction

- Flange: Sheet metal S355
- Nut: DIN EN ISO 4032-8
- Continuous welded helix
- Coating: Hot-dip galvanized according to DIN EN ISO 1461

Applications

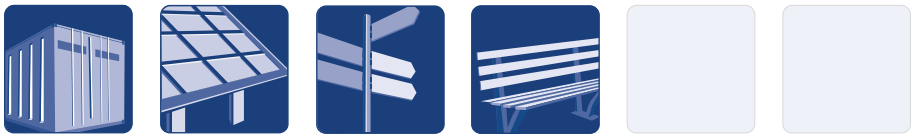

KRINNER
The Ground Screws

Technical Data

	KSF M 89x2100-M24	KSF M 89x1600-M24	KSF M 89x1300-M24
a	**Length (mm) (±25 mm)**		
	2080	1580	1280
b	**Shaft outer diameter (mm)**		
	88.90	88.90	88.90
c	**Inner diameter (mm)**		
	81.70	81.70	81.70
d	**Thread**		
	M24	M24	M24
e	**Pitch circle diameter (mm)**		
	150	150	150
f	**Pitch circle holes (mm)**		
	6 x ∅ 14	6 x ∅ 14	6 x ∅ 14
g	**Flange wrench size (mm)**		
	160	160	160
h	**Flange outer diameter (mm)**		
	182	182	182
i	**Flange thickness (mm)**		
	10	10	10

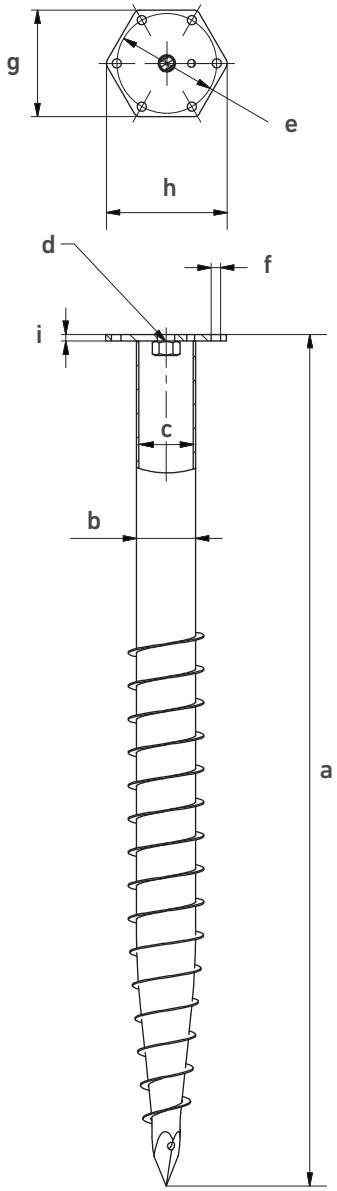

Online Service

KSF M 89x2100-M24	KSF M 89x1600-M24	KSF M 89x1300-M24
Webkey		
M2530211D	M2530111D	M2530011D

Subject to technical change!
Krinner Schraubfundamente GmbH | Passauer Straße 55 | D-94342 Straßkirchen
Phone: +49 9424 9401-80 | E-Mail: service@krinner.com | www.krinner.com

KRINNER
The Ground Screws

Technical Data Sheet M Series

Basic Info

KSF M 76x2100-M16	KSF M 76x1600-M16	KSF M 76x1300-M16
Nominal length (mm)		
2100	1600	1300
Tube diameter (mm)		
76.10	76.10	76.10
Weight (kg)		
16.00	12.50	10.00
Item number		
25204	25203	25202

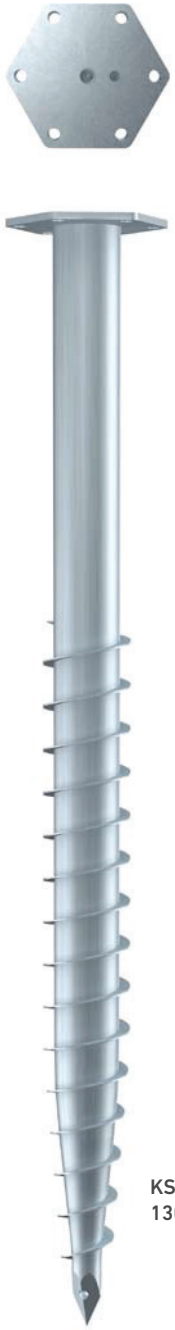

KSF M 76x
1300-M16

Construction

- Flange: Sheet metal S355
- Nut: DIN EN ISO 4032-8
- Continuous welded helix
- Coating: Hot-dip galvanized according to DIN EN ISO 1461

Applications

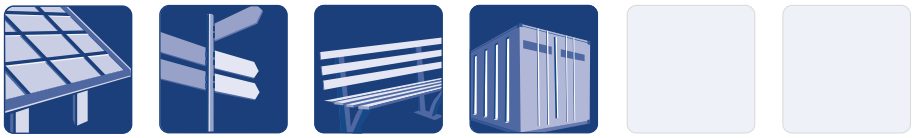

KRINNER
The Ground Screws

Technical Data

	KSF M 76x2100-M16	KSF M 76x1600-M16	KSF M 76x1300-M16
a	**Length (mm) (±25 mm)**		
	2078	1578	1278
b	**Shaft outer diameter (mm)**		
	76.10	76.10	76.10
c	**Inner diameter (mm)**		
	68.90	68.90	68.90
d	**Thread**		
	M16	M16	M16
e	**Pitch circle diameter (mm)**		
	150	150	150
f	**Pitch circle holes (mm)**		
	6 x ∅ 14	6 x ∅ 14	6 x ∅ 14
g	**Flange wrench size (mm)**		
	160	160	160
h	**Flange outer diameter (mm)**		
	182	182	182
i	**Flange thickness (mm)**		
	8	8	8

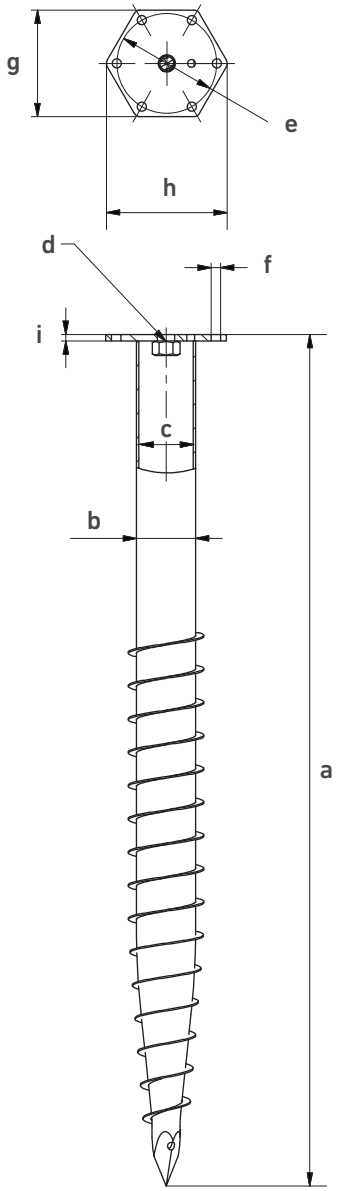

Online Service

KSF M 76x2100-M16	KSF M 76x1600-M16	KSF M 76x1300-M16
Webkey		
M2520411D	M2520311D	M2520211D

Krinner Schraubfundamente GmbH | Passauer Straße 55 | D-94342 Straßkirchen
Phone: +49 9424 9401-80 | E-Mail: service@krinner.com | www.krinner.com

KRINNER
The Ground Screws

Technical Data Sheet M Series

Basic Info

KSF M 76x1300-M12	KSF M 76x1000-M12	KSF M 76x800-M12
Nominal length (mm)		
1300	1000	800
Tube diameter (mm)		
76.10	76.10	76.10
Weight (kg)		
7.00	5.30	4.20
Item number		
25201	25205	25200

KSF M 76x 1000-M12

Construction

- Flange: Sheet metal S355
- Nut: DIN EN ISO 4032-8
- Continuous welded helix
- Coating: Hot-dip galvanized according to DIN EN ISO 1461

Applications

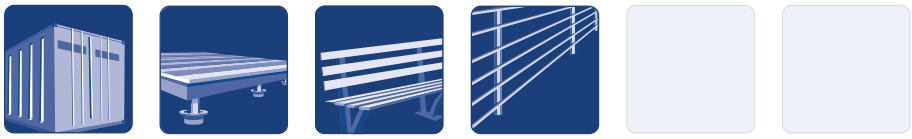

KRINNER
The Ground Screws

Technical Data

	KSF M 76x1300-M12	KSF M 76x1000-M12	KSF M 76x800-M12
a	Length (mm) (±25 mm)		
	1275	1045	815
b	Shaft outer diameter (mm)		
	76.10	76.10	76.10
c	Inner diameter (mm)		
	70.90	70.90	70.90
d	Thread (mm)		
	M12	M12	M12
e	Pitch circle diameter (mm)		
	116	116	116
f	Pitch circle holes (mm)		
	6 x ∅ 11	6 x ∅ 11	6 x ∅ 11
g	Flange wrench size (mm)		
	120	120	120
h	Flange outer diameter (mm)		
	136	136	136
i	Flange thickness (mm)		
	5	5	5

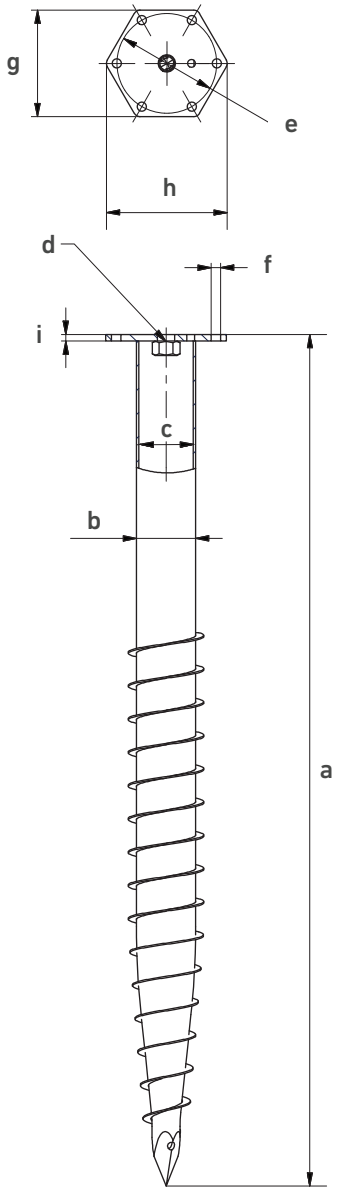

Online Service

KSF M 76x1300-M12	KSF M 76x1000-M12	KSF M 76x800-M12
Webkey		
M2520111D	M2520511D	M2520011D

Krinner Schraubfundamente GmbH | Passauer Straße 55 | D-94342 Straßkirchen
Phone: +49 9424 9401-80 | E-Mail: service@krinner.com | www.krinner.com